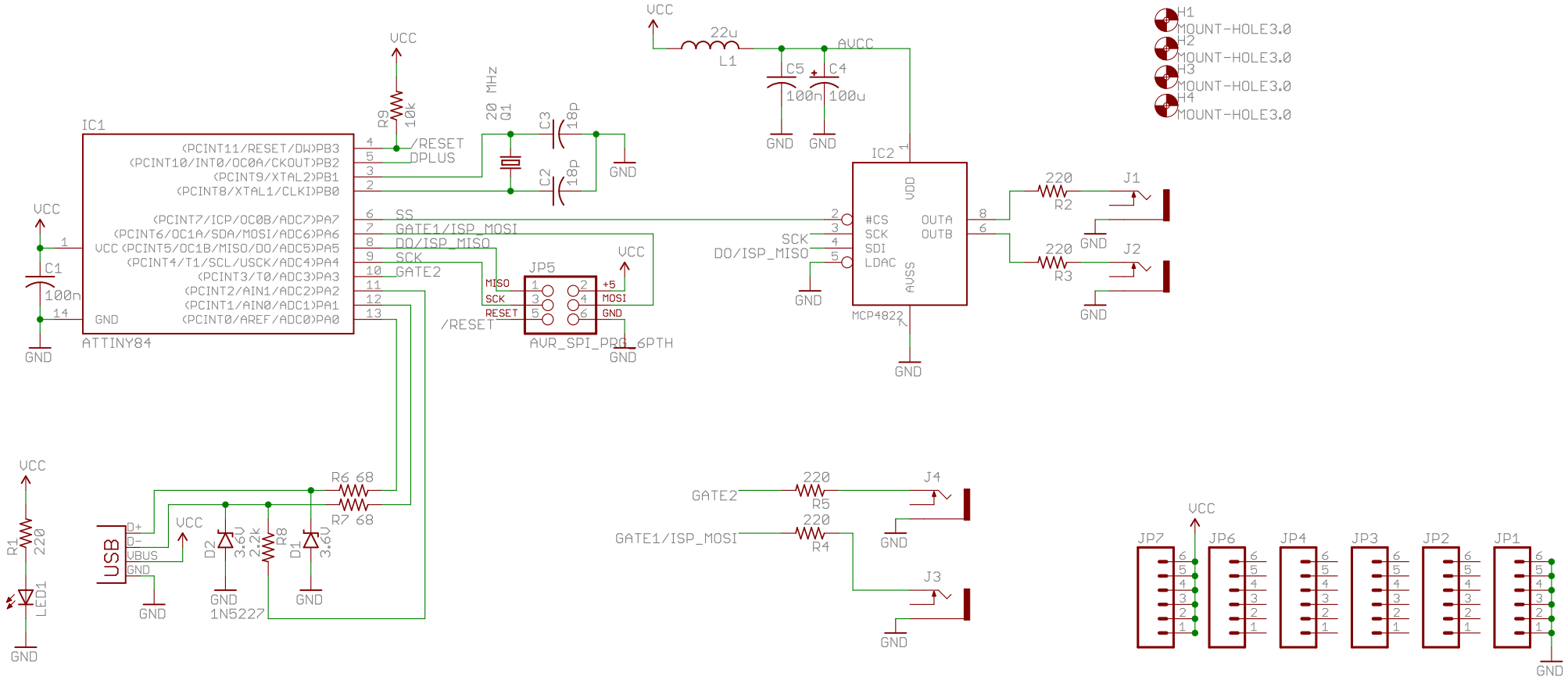
IC1
ATTINY84
(PCINT11/RESET/DW)PB3
(PCINT10/INT0/OC0A/CKOUT)PB2
(PCINT9/XTAL2)PB1
(PCINT8/XTAL1/CLKI)PB0
(PCINT7/ICP/OC0B/ADC7)PA7
(PCINT6/OC1A/SDA/MOSI/ADC6)PA6
VCC (PCINT5/OC1B/MISO/DO/ADC5)PA5
(PCINT4/T1/SCL/USCK/ADC4)PA4
(PCINT3/T0/AREF/ADC3)PA3
(PCINT2/AIN1/ADC2)PA2
(PCINT1/AIN0/ADC1)PA1
(PCINT0/AREF/ADC0)PA0
GND
VCC
C1
100n
/RESET
DPLUS
SS
GATE1/ISP_MOSI
DO/ISP_MISO
SCK
GATE2
R9
10k
20 MHz
Q1
C3
18p
C2
18p
JP5
MISO
SCK
RESET
+5
MOSI
GND
AVR_SPI_PRG_6PTH
L1
22u
C5
100n
C4
100u
AVCC
IC2
MCP4822
VDD
#CS
SCK
SDI
LDAC
OUTA
OUTB
AVSS
R2
220
R3
220
J1
J2
H1
H2
H3
H4
MOUNT-HOLE3.0
R1
220
LED1
USB
D+
D-
VBUS
GND
D2
3.6V
R8
2.2k
D1
3.6V
1N5227
R6 68
R7 68
GATE2
GATE1/ISP_MOSI
R5
220
R4
220
J4
J3
JP7
JP6
JP4
JP3
JP2
JP1