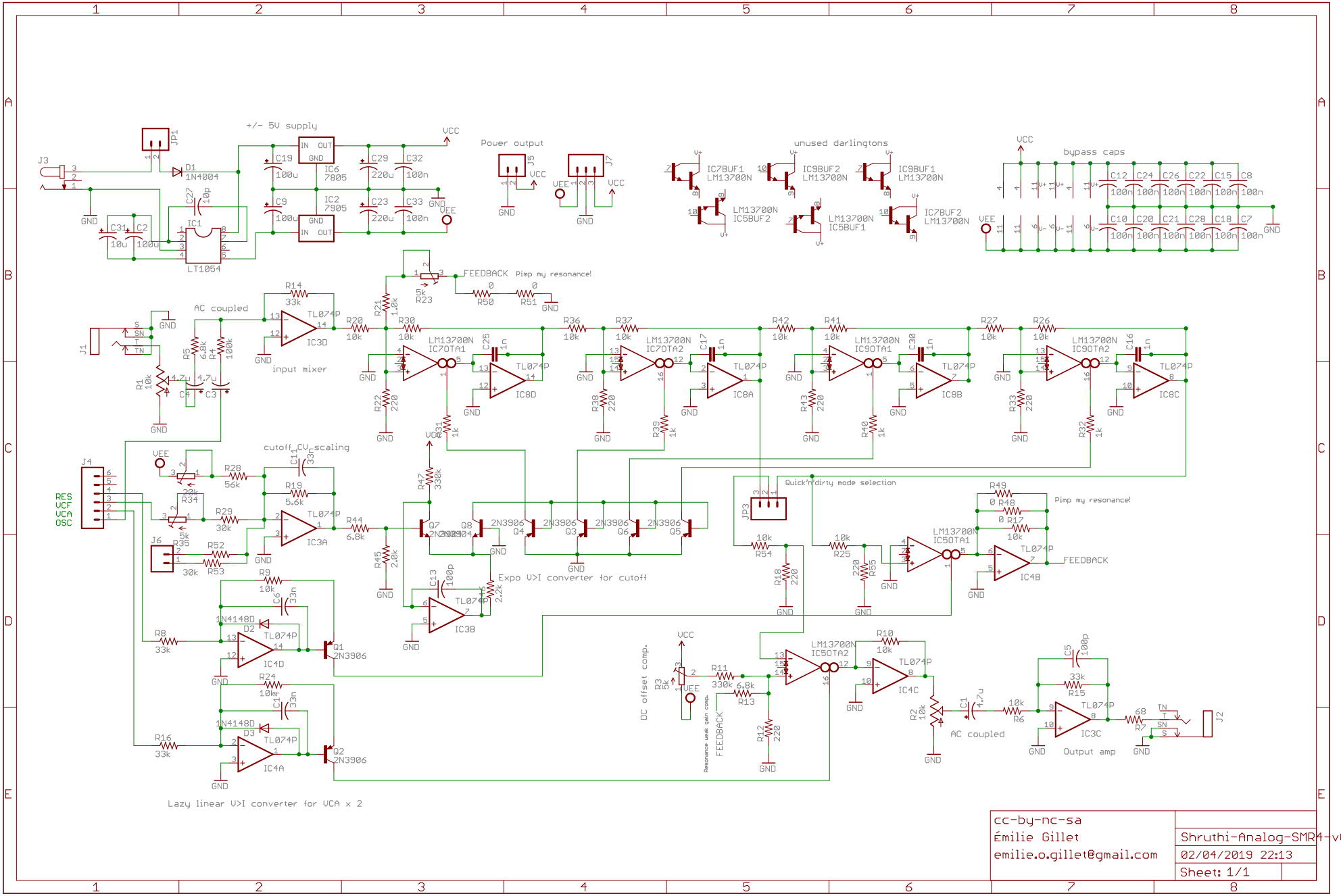
+/- 5V supply
Power output
unused darlingtons
bypass caps
AC coupled
input mixer
FEEDBACK Pimp my resonance!
cutoff CV scaling
Quick'n'dirty mode selection
Pimp my resonance!
Expo V>I converter for cutoff
DC offset comp.
Resonance weak gain comp.
Output amp
Lazy linear V>I converter for VCA x 2
RES
VCF
VCA
OSC
cc-by-nc-sa
Émilie Gillet
emilie.o.gillet@gmail.com
Shruthi-Analog-SMR4-v08
02/04/2019 22:13
Sheet: 1/1